MEMBER OF NORTH AMERICA APPLIANCE INTERNATIONAL CORP

北美电器(珠海)有限公司
NORTH AMERICA APPLIANCE(ZHUHAI)CO.,LTD

Add: Fl.10 Peregrine Plaza No.1325
MiddleHuaihai Rd Shanghai P.R.C
Tel: 0086-21-64749302
Fax: 0086-21-64338475
Http: www.acachina.com

地址: 中國上海淮海中路1325
號百富勤廣場10層
電話: 0086-21-64749302
傳真: 0086-21-64338475
網址: www.acachina.com

PRINTED IN CHINA

Ver:3.0

[NEW CLASSIC] RANGE

bread maker

PROFESSIONAL STYLE

面包机
说 明 书

[NEW CLASSIC] RANGE

bread maker

PROFESSIONAL STYLE

面包机
说 明 书

ACA APPLIANCE CO. OF AMERICA

HOME Enjoyment

MB-100

[instruction booklet]

PLEASE READ THIS BOOKLET CAREFULLY BEFORE USE AND KEEP
IN A SAFE PLACE SHOULD YOU WANT TO REFER TO IT AGAIN

公司简介 …… 1
产品特点 …… 2
执行标准 …… 2
构件名称 …… 3
电器原理图 …… 3
技术规格 …… 3
注意事项 …… 4
操作指南 …… 5
清洁及保养 …… 6
繁体版说明书 …… 7
英文版说明书 …… 13

公司简介

ACA，源自美国的电器企业，伴随着不断发展，现已成为一家全球性的以研发，制造和销售商用和家用电器产品为主的集团公司。ACA以其精湛的专业技术和独特的研发理念，不断推出创新的产品和服务来满足消费者的需求。同时，始终坚持对于环境的保护，无论从产品的材料选择，还是对生产过程的控制，我们都强调以保护环境为前提。

目前，ACA和他旗下的优质产品已经来到中国，并成功开发和生产小家电产品以满足中国消费者不断增长的需求。现在，ACA在中国销售的系列产品包括：

厨房家电产品：

面包机、电饭煲、电烤箱、光波及微波炉、电磁炉灶、烤鸡炉、快速烤炉、咖啡壶、果汁机、排油烟机、消毒碗柜、电煎锅、打蛋机、豆浆机等；

卫浴家电产品：

电热水器、电暖器、电吹风、浴灯、干手机等；

个人护理系列和居室清洁系列产品

秉承ACA“致力于改善生活品质”的企业理念，我们将以创新的产品，为中国消费者创造更舒适的生活。

公司简介 产品特点 执行标准 构件名称 电器原理图 技术规格 注意事项 操作指南 清洁及保养 繁体及英文

产品特点

新颖

★透明：采用圆弧形、高强度、耐高温的透明设计，炉内食品清晰可见，新颖别致。

高科技

★触摸键：整体轻触式按键设计，操作方便可靠、寿命长、手感特别好。

★防误触按键自锁保护：工作中除"启动/停止"键，其他按键自锁保护，按压不会改变设置。

★微电脑：内部芯片固化各种食物的加工程序和时间，只需轻轻一按，选择后自动完成全过程。

★液晶显示：LCD液晶显示屏，显示面包机的工作完成剩余时间和菜单的设置，清楚明了。

★故障自检：使用中面包机发生故障时，能自动蜂鸣报警并显示故障代码，方便检修。

★记忆功能：使用中突然停电，10分钟内再次通电时，面包机可恢复设定工作状态。

安全

★接地保护：采用双重接地防漏电保护,使用更安全。

★超温保护：当恒温元件失效，导致面包机内异常升温时，限温装置能自动切断电源供给。

方便

★程序控制：微电脑控制不同菜单功能所需的：发热功率、温度范围、加热时间、和面、发酵等过程所需时间，只要选择对应的菜单即可。

★自动恒温：内置高灵敏度的温控器，可保持面包机内腔的加热温度稳定，均匀。

★延时功能：通过调整“时间”栏的“▼”、“▲”键，在最长近13个小时之时间段内可任意设定您想要作好面包的时间。

★定时功能：面包机作烘烤使用时，可定时60分钟，以配合解冻、烘烤、保温和烧烤的需要。

★提示功能：面包机工作完毕或异常时，有蜂鸣声提示，方便使用。

耐用

★ 全塑外壳：外壳选用进口PP原料制造，防腐蚀、不生锈、易清洁、强度高。

★ 喷涂面包桶：整体拉伸特制的面包桶，内表面采用“不沾”静电喷粉工

艺处理，耐高温，不粘锅，防锈效果好。

★特制内胆：优质电解铝板制作内胆，表面钝化处理，隔热防锈，不易磨损。

★发热管：特殊工艺处理的发热管，高热效，耐油烟不生锈，寿命长。

★高品质电机：耐高温、低速、低噪声、大扭矩电机，和面有力、寿命长，可以充分揉出面粉的筋性。

节能

★双层箱体：内外双层壳体，能有效减少内胆的热量散失，节约能源。

★省电模式："菜单化"设定功能档位，优化选择加热功率和加热时间，省时节电。

多用性

★可完成各种"面包"制作、"发面团"、"和面"、"果酱"和"烘烤"等多项功能。

尊敬的用户：

感谢您的选择、使用本产品。

本产品是一件设计精良，高品质的家用电器产品。为了方便您使用，请仔细阅读本说明书，并按照本书的说明进行操作。

自始至终，我公司将为您提供优质的服务，使用时无论有什么问题，欢迎拔打我公司的热线电话，也可与当地服务中心联系。

再次感谢您选择使用我公司的产品，由于产品的改进，您所得到的产品可能与说明书中图示不完全一致，谨此致歉。

执行标准

使用之前，请仔细阅读并妥善保存本说明书。

该系列产品执行中华人民共和国国家标准：

GB4706.1—1998 《家用和类似用途电器的安全：通用要求》

GB4706.14—1999《家用和类似用途电器的安全：面包片烘烤器、烤架、电烤炉及类似用途器具的特殊要求》

GB4706.30—2002《家用和类似用途电器的安全：厨房机械的特殊要求》

本产品按家用标准设计制造，请勿商用或工业用途。

公司简介 产品特点 执行标准 构件名称 电器原理图 技术规格 注意事项 操作指南 清洁及保养 繁体及英文

构件名称

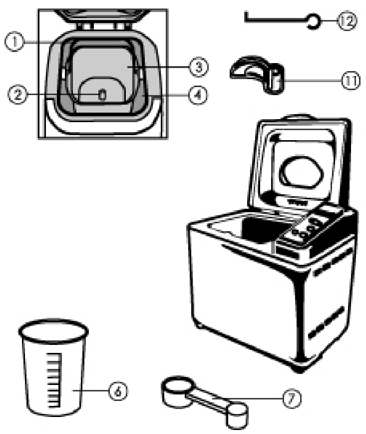

1、提手
2、转轴
3、面包桶
4、内胆
5、壳体
6、量杯
7、量匙
8、通风孔
9、面膜
10、上盖
11、搅拌棒
12、取物钩

电器原理图

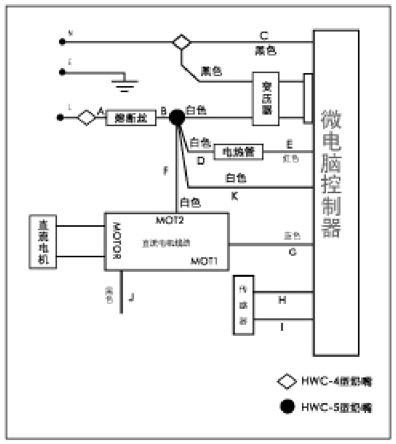

技术规格

☆产品名称：全自动面包机

☆产品型号：MB—400；

☆额定供电：220V/50Hz 交流，带接地插孔。线路容许额定负载电流大于3A。

☆额定功率：415W。

☆程序默认设置：选择：1；时间：3：25；重量：900克；烧色：中。

☆电机参数：

适用电源：220V/50Hz 交流。

电机功率：45W。

☆最大搅拌量：900克。

* 技术参数如有调整，恕不另行通知。

* 敬告：北美电器保留对说明书所有文字解释修改权。

* 产地：中国.广东.中山

功能介绍

菜单：

参照插图所示，按“选择”键设定，液晶屏显示的1—12与面板上列出的1–12项菜单是一一对应的

“1” – 普通面包：时间、烤色、重量全部可调
基本工作时间：3:13（450克）； 3:18（700克）；
3:25（900克）；特快模式 2:12（450克）；
2:17（700克）；2:24（900克）；

“2” – 法式面包：时间、烤色、重量全部可调
基本工作时间：3:30（450克）； 3:32（700克）；
3:25（900克）；特快模式 2:30（450克）；
2:32（700克）；2:35（900克）；

“3” – 全麦面包：时间、烤色、重量全部可调
基本工作时间：3:43（450克）； 3:45（700克）；
3:48（900克）；特快模式 2:28（450克）；
2:30（700克）；2:33（900克）；

“4” – 甜味面包：时间、重量全部可调，烤色不可调
工作时间：3:17（450克）； 3:22（700克）；3:27（900克）；

“5” – 700克特快面包：时间、烤色、重量全部不可调
固定时间：0:58；

“6” – 900克特快面包：时间、烤色、重量全部不可调
固定时间：0:58；

“7” – 快速面包：时间、烤色、重量全部不可调
固定工作时间：1:43；

“8” – 欧式面包：时间可调、烤色、重量全部不可调
基本工作时间：3:55；

“9” – 生面团：烤色、重量全部不可调，时间可调
基本工作时间：1:30；

“10” – 发面团：烤色、重量全部不可调，时间可调
基本工作时间：2:00；

“11” – 果酱：时间、烤色、重量全部不可调
基本工作时间：1:05；

“12” – 烘烤：时间、烤色、重量全部不可调
基本工作时间：1:00；

烧色

按“烧色”键设定：“浅”“中”“深”烧色和“快速”模式（仅有普通、法式、全麦三种选择可以调整，其余选择不可调）。

按压“烧色”键，伴随蜂鸣提示音，液晶屏底部的烧色指示“–”，由“中”、“深”、“浅”三个烧色位置，循环跳动显示，程序默认“中”烧色。

预约延时

按时间栏的"▲"和"▼"键设定，最长13小时预约，具体操作详见第17页"面包制作快速入门"栏目：1––10项；屏幕显示时间为制作完成时间（包括制作面包的基本时间＋延时等待的时间）。

每按"▲"键一次，增加延时10分钟，直到最长延时时间再按又恢复到基本工作时间，如此循环变化；

每按"▼"键一次，减少延时10分钟，未增加延时而直接按此键，屏幕将显示到最长延时时间，再按时每次减少10分钟，如此循环变化。

重量

按“重量”键设定 只有普通、法式、全麦、甜味四种选择可以调整，其余其余选择不可调整，程序默认重量“900克”。

根据您所添加面包配料不同，需要对重量进行设定。在适用选择下，按“重量”键液晶显示屏顶部的重量标记“–”在“900克”、“700克”、“450克”之间循环跳动。

启动/停止

按压此键，循环选择“开机”、“关机”功能，按压此键，机器有蜂鸣声提示。

状态显示

面包机启动进入工作状态后，液晶屏显示包括倒计时的剩余时间、重量指示“–“和所选择的烧色指示箭头"–"。

断电记忆

本机具有断电后设定状态的记忆功能：面包机启动工作后如遇停电或意外断电，持续时间不超过15分钟，再次通电时，面包机将恢复原设定的工作状态。再次通电后，实际工作时间与原设定的工作时间会不相符

实际工作时间 ＝ 断电时间 ＋ 原设定工作时间

如断电时间超过15分钟，面包机将不能恢复到原来的工作状态。直接显示为开机初始状态的默认设置：菜单“1:P",时间为"3:00"烧色“中”。如面包机处于未启动状态，则断电再通电后，将恢复到通电的初始状态的默认状态。

功能介绍

自检功能

1、工作条件判断：

如面包机目前状态不适合所选“菜单”功能的初始条件要求，则面包机不能正常工作。

示例：选择菜单功能时，如面包机内温度过高或过低，都不能满足相关制作的初始条件要求。机内温度应在-10℃～50℃之间；否则您启动面包机工作时，面包机会禁止工作并显示“E00”或“E01”，发出连续短促的鸣声提醒您。

此时，请打开上盖，取出面包桶，待机内温度符合初始条件要求后，再放回面包桶，选择您所需“菜单”和烧色，启动面包机开始工作。

当您做完一个面包后，想连续再作一个面包时，由于机内温度偏高，不能马上工作，需要等待冷却后才能作第二个面包。当然，可以使用电风扇、空调等快速冷却。

如面包机始终不能正常使用，面包机可能发生故障，请联络维修部进行维修。

2、故障判断功能：

本机具有自动故障诊断功能，如：温度传感器的开路、短路等。

当机内的温度传感器发生开路时，通电后LCD显示“EEE”，同时会发出连续短促的鸣声来提醒您。当机内的温度传感器发生短路时，通电后LCD显示“HHH”，同时会发出连续短促的鸣声来提醒您。

发生上述现象时，请及时与有关经销商联络或送机到维修部进行维修。

蜂鸣器提示功能

1）、当通电或复位时，蜂鸣器将鸣响一声提示。

2）、按动“菜单”键、“烧色”键或时间栏的“▲”、“▼”键，每次按一下，则蜂鸣器将鸣响一声提示。如持续按动，则蜂鸣器将连续短时的鸣响提示。

3）、进行“启动/停止”键的操作时，每进行一次操作，蜂鸣器将鸣响一声提示。

4）、如果加入果料，在和面的过程中蜂鸣器会发出断续10声鸣响，提醒您此时应该及时加入果料。

5）、进入保温过程时，蜂鸣器会发出断续5声鸣响来提醒您工作完成；保温过程中，每隔5分钟，蜂鸣器发出断续5声鸣响。

6）、保温完成时，蜂鸣器会发出断续10声鸣响提醒工作完成。

保温功能

烤制面包完成后，会自动转入"保温"状态，并隔5分钟鸣响5声，同时"："闪烁提醒您工作完成，保温时间程序默认设置为1小时，超过保温时间"："停止闪烁，机器不再发热保温，若要重新启动机器，必须先按"启动停止"键。

公司简介 | 产品特点 | 执行标准 | 构件名称 | 电器原理图 | 技术规格 | 注意事项 | 操作指南 | 清洁及保养 | 繁体及英文

随机附件

搅拌棒	面包桶	量杯	量勺	取物钩	说明书	售后服务指南
1个	1只	1个	1个	1个	1本	1本

☆ 附件以实际装箱为准

量杯使用注意事项

菜谱中单位"杯"不是满杯，参见下图所示。

1、 量取液体类配料：

用透明量杯量取液体配料后，放置于水平台面，视线平齐液体表面核对刻度线位置。

若要添加鸡蛋，牛奶等液体配料时，要与水直接在量杯中混合后，再正确读算刻度。

2、 量取固体粉末类配料：

量取后轻轻摇晃量杯至上表面水平后，方便读取刻度即可，不要长时间使劲摇晃，否则可能导致粉末内部压实，上表面沉降而量取过量。

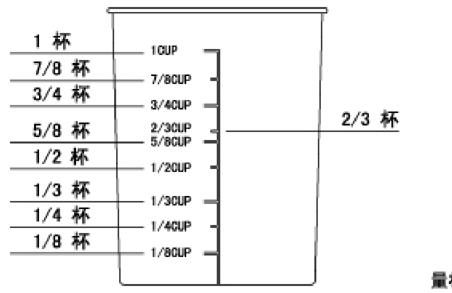

量杯刻度示意图

操作指南

开机准备

1、拆开包装箱，清点随机附件和资料，并详细阅读说明书。

2、面包机仅限于室内使用。把面包机放在平台上（如厨房的工作台或桌子等），面包机的顶部离墙壁、木制品、或桌面上的任何物体的距离至少在11cm以上。

3、初次使用面包机前，请打开上盖，取出面包桶和搅拌棒等附件，用含有中性清洁剂的温水冲洗，或放到洗碗机里清洗。

4、参照“推荐食谱”加入需要制作的食品原料和配料。

5、检查电源、插座等，确认符合产品“使用说明书”的线路额定负载电流大于3A的要求。

注意：为了安全，使用时请不要在面包机顶部上放置任何东西，以免堵塞排气窗。

操作开始

按"菜谱"配料，依"菜单−烧色−重量−时间−启动"顺序操作。

1、烤“面包”功能。

1

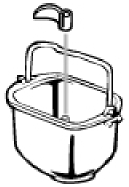

将搅拌棒半圆孔对准面包桶内的旋转轴的半圆位置插入。

2

按您选择的面包配比，将水、面粉、鸡蛋等原料依次放入面包桶内；最后放入酵母，将酵母放在原料的中间。如需要延时工作时，最好将酵母放在面粉的上面，使酵母不要与水、食盐、糖混合，否则将影响酵母菌活性的正常发挥。

加料前请务必将面包桶提出面包机外，以防原料落电热管上，加热时燃烧冒烟。

3

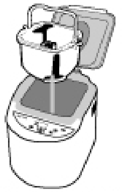

将面包桶对准内胆的导销，用双手压入面包机内胆内，直至听到“咔嚓”声。表明面包桶已装好，然后盖上面包机上盖。

如果感觉面包桶下压时有阻碍请将面包桶提起，将面包桶底部的带动杆转过一定角度再次放入即可。

4

插上电源听到蜂鸣声，屏幕显示如下：

约3秒后变为：

显示的“1：P”对应操作面板上的1−普通面包，按“菜单”键选择菜单屏幕显示对应号码

5

此时依需要，按“烧色”键在“浅”、“中”和“深”之间选择一种，显示屏会显示该“菜单”下对应“烧色”的基本工作时间。若不选时，默认的“烧色”是“中”。

只有“普通”、“全麦”、“法式”、“甜味”面包的“烧色”可调，其他菜单项不可调，默认“中”烧色。

6

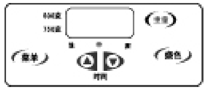

面包重量设定，按压“重量”键，依照配料的多少来选择“500克”和“750克”，选择后屏幕左侧对应重量位置上会出现黑色的指示标记。不选默认“750克”。

7

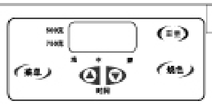

如需延时工作，按时间栏的“▲”和“▼”键设定，每按“▲”键一次，增加延时10分钟；每按“▼”键一次，减少延时10分钟；但实际的工作时间最短不会少于该菜单的基本工作时间：

屏幕显示时间=完成需要时间

8

按“启动/停止”键，面包机开始工作，“：”开始闪烁，首先是搅面，前三分钟程序控制间歇搅拌，以防止面粉飞扬，3分钟后自动转换为连续搅拌。

设置延时后，启动时，液晶屏上的“：”开始闪烁，但并不搅面，直到倒计时到基本工作时间才开始搅面，在此期间，只有屏幕耗电，耗电量极小。

启动“全麦”程序时，即使不延时，也并不立即开始搅面，前30分钟是对全麦粉的浸泡，30分钟后才开始搅面。屏幕上“：”开始闪烁，表明开始工作。

如需停止工作，按住“启动/停止”键约1秒钟听到蜂鸣声即可。工作中严禁按此键，否则只能重新开始，其他键被锁定。

9

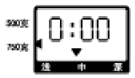

时间运行至“0：00”时，蜂鸣器将鸣响5声提示操作结束（以后每5分钟响5声提示），并自动进入“保温”状态，“：”仍然闪烁。持续保温1小时后，蜂鸣器将鸣响10声提示保温结束，“：”停止闪烁 工作状态符号停留在“结束”位置

若终止保温，按住“启动/停止”键约1秒钟，听到蜂鸣声，使返回菜单的初始状态。

10

听到蜂鸣声提示面包做好后，先停止机器保温工作，带上手套取出面包桶，注意防止烫伤，轻轻振动将面包倒出，用取物钩取出嵌在面包中的搅拌棒后，用面包刀分切开，即可食用。

在准备取出面包桶时，请先按住“启动/停止”键1秒钟，直到听见蜂鸣声，确认面包机停止“保温”工作。

若搅拌棒嵌在面包桶中不脱落，取出面包后加入适量清水浸泡，过一段时间充分冷却后即可方便取出，清洁干净后妥善保存，以防丢失。

11

如想在面包中添加果料，请在听到蜂鸣器发生的连续10声鸣响提示声时，及时打开顶盖，将果料倒入面包桶内，也可以在和面开始十分钟左右，倒入面包桶，果料用量以不超过半杯为宜。

2、**“和面”功能**

面包机可用作很好的和面机，配料可参照“生面团”，当然也可根据您自己的需要来配制。将菜单设定到“生面团”功能，启动即可，完成后面包机会发出鸣响提醒您，也可以反复使用，直到您满意面团为止。

3、**“发面团”功能**

面包机可用作很好的发面机，配料可参照推荐“发面团”食谱，也可根据您自己的需要来配制，不加食盐、食糖、奶粉等。将菜单设定到“发面团”功能，启动即可。发面完成后，蜂鸣器会发出5声鸣响，提醒您已完成操作。当然也可以根据您需要的发酵程度提前中止发酵过程。

4、**选择“果酱” 制作**

面包机可以制作出味道极其鲜美的各种果酱。制作果酱时，选择您需要的水果，如桔子、菠萝、苹果、草莓等，按照推荐食谱中的配方，估计水果的用量，将水果洗净、去皮、去核、切成1寸见方的小块，用果汁机或搅拌器、豆浆机（不用滤网）等将水果打成细腻的水果糊，再按说明书中的果酱配方配料，选择“果酱”功能后启动即可，完成后面包机会有声音提示。将面包桶提出机外，适当冷却后将果酱倒入容器内。注意：刚制作完成的果酱温度很高，请特别注意看护儿童，防止烫伤。

5、**“烘烤”功能**

1）半自动面包制作：

该功能是一项非常实用的功能，当您掌握了面包制作技术之后，您可以单独使用“发面团”功能自己掌握搅拌时间、发酵时间，然后转换到“烘烤”功能，烘烤时间也可由您自由掌握。利用这种功能组合，再参考一下其他面点制作的书籍，您可开发出各种美味的花色面包来。

2）其他食品的烤制：

☆将面包桶放入内胆中安装好。

☆将切成小块并调制好的食品用烧烤器具串好，合理地支撑在面包桶内，再盖好面包机的上盖。

☆按动“菜单”键，观察液晶显示屏，选择“11：P” “烘烤”功能。

☆按“启动/停止”键启动，面包机即开始加热，进入“烘烤”状态。

☆时间运行至“0：00”时，蜂鸣器将鸣响5声提示操作结束，并自动进入“保温”状态。（以后每5分钟响5声提示）

☆在工作过程中，如发现食品已烤好，按“启动/停止”键中止面包机的工作，如需要继续烘烤，则可再次启动“烘烤”功能。

注意：烤制食品最好进行合理分割，且相距一定距离地均匀放置，这样才能烤制均匀；初次使用时，您对时间可能掌握不好，不过不要紧，下次您就可烤得更好。

操作结束

操作结束使用完毕后，切断电源，将面包机和附件清洁干净，擦干或晾干后，装入包装箱，置于干燥通风的地方。

推荐食谱

普通面包	750克	500克
水	1杯+3大勺	半杯+3大勺
植物油	2大勺	1大勺
精盐	2小勺+半小勺	1小勺
砂糖	2大勺	1大勺+半大勺
奶粉	1大勺	1大勺
面包粉	3杯+1/4杯	2杯+1/4杯
发酵粉	1小勺+5/6小勺	1小勺 1/4小勺

全麦面包	750克	500克
水	1杯+3大勺	3/4杯+3大勺
植物油	2大勺	2大勺
精盐	1小勺	1小勺
红糖	4大勺	4大勺
奶粉	3大勺	2大勺
全麦粉	3杯+1/4杯	2杯+3/4杯
发酵粉	1小勺+1/3小勺	1小勺

法式面包	750克	500克
水	1杯+2大勺	3/4杯
植物油	1大勺	1大勺
柠檬汁	1小勺	1小勺
精盐	1小勺+1/4小勺	3/4小勺
砂糖	1大勺	1大勺
面包粉	3杯+1/4杯	2杯+1/4杯
发酵粉	1小勺+1/3小勺	1小勺+1/3小勺

甜味面包	750克	500克
水	7/8杯	半杯+3大勺
植物油	1大勺	1大勺
精盐	1小勺	半小勺
砂糖	1/3杯	1/4杯
奶粉	1大勺+半勺	1大勺
面包粉	3杯+1/4杯	2杯+1/4杯
发酵粉	1小勺+1/3小勺	1小勺+1/3小勺

特快面包	750克	
温水(45~50℃)	7/8杯	
鸡蛋	1-2个	
植物油	2大勺	
精盐	1小勺	
砂糖	2大勺	
奶粉	2大勺	
面包粉	3杯	
发酵粉	4小勺	

欧式面包	配方	果酱	配方
水	1杯+3大勺	★水果糊	3杯
植物油	2大勺	草莓酱	2大勺
精盐	1小勺+半小勺	☆咖喱粉	6大勺
砂糖	4大勺	砂糖	1杯+1/4杯
奶粉	3大勺	★柠檬汁	2大勺
面包粉	3杯+1/4杯		
发酵粉	3小勺+1/3小勺		

快速面包	配方(一)	快速面包	配方(二)
橘汁	3/5杯	牛奶	1杯
植物油	2大勺	植物油	3大勺
精盐	1小勺	精盐	1小勺
砂糖	3/4杯	砂糖	3/4杯
鸡蛋	1个	鸡蛋	1个
烘烤苏打	1/4小勺	胡桃粉	1杯
杏仁渣	1杯	橘汁	1杯
烘烤粉	2小勺	烘烤粉	3小勺+半小勺
面包粉	4杯	面包粉	4杯

生面团	参考配方	发面团	参考配方
水	3/4杯	水	2/5杯
■植物油	4大勺	植物油	1大勺+半勺
■ 鸡蛋	2个	鸡蛋	1个
■ 砂糖	4大勺	砂糖	1大勺
■ 精盐	1小勺+1/3小勺	精盐	1小勺+半勺
面粉	4杯	面粉	2杯+半杯
		发酵粉	1小勺+半勺

注意：1、前面有"■"标记的配料，可依需要选择;
2、☆咖喱粉也可以用半杯淀粉（生粉）代替;
3、★水果糊可以选用橘子、苹果、菠萝等水果，柠檬汁也可把一个鲜柠檬去皮、去核、与水果一起放入果汁机（或搅拌器、豆浆机）中打碎。

面包配料注意事项

面粉的选择

如果您所在的地区不能买到专门的面包粉，您需要使用"高筋特精粉"或"饺子面条专用粉"或者到当地的面包房了解面包师所用面粉的品牌。

不是随便任何面粉都可以做出好的面包来，包括自发粉。面粉"筋性"好坏（即蛋白质含量高低）是直接影响制作面包成败的关键之一，务必选好面粉。

发酵粉（酵母粉）

不能用苏打粉或泡打粉代替。

酵母粉过期或活性不够，将严重影响面包松软程度，和外观是否饱满，判断其活性方法：

取半杯温水（40～50°C），放入一小勺食糖搅匀，再撒入两小勺酵母粉于水面；放于温暖地方，静置10分钟后，杯内混合物应该发泡上涨到一杯刻度线位置；否则，必须重新购买新鲜酵母粉，以免制作面包失败。

水与面粉的配比

由于不同品牌、不同等级、不同地区的面粉吸水率不一定相同，选用时要注意，您可能要　因此适当调整说明书菜谱中水的用量。所以每使用一种新的面粉，要记住其合适的水用量。

水过量，面团太软，不成型，停止搅拌时面团不会维持球状，而会很快塌下去，面团非常粘手，甚至成为糊状，这样做出的面包，内部气孔大，面包硬，没有弹性，面包表面是平的，或者会出现塌陷，而正常的顶面形状应该是饱满的半球型。

待搅拌5分钟后有上述面团过湿的症状，则需要加入面粉，根据干湿程度不同，每次加一到两大勺，待面粉完全融入面团后再判断干湿。

水不足，则搅拌5分钟后，仍然有干面粉散落再面包桶底部，不能聚合成一团，最后可能会勉强搅成一团，但面团过硬没有弹性，表面粗糙。这样的面团发酵效果变差，做出的面包气孔较细密，烤出的面包外壳较硬。

待搅拌5分钟后有上述面团过干的症状，则需要加水，每次一大勺，待水与面完全混合后再判断干湿。

其他配料

糖和鸡蛋都会加重面包的烤色，应严格按照推荐菜谱中规定的用量，任意加多，会使颜色加重，甚至烤焦。要想避免烤焦只能提前中止烘烤。而且加入鸡蛋会使面团变稀，如一定要加入鸡蛋，必须将鸡蛋打入量杯里，然后加水到规定刻度。鸡蛋不宜超过一个。

维护保养

表面清洁

1、清洗面包机前，请拔出插头，切断电源。
2、用柔软的湿布蘸取少量的中性洗洁液，轻轻擦拭，再用干布擦干。
3、不可使用汽油或其他溶剂，应保持面包机内外表面的干燥。

附件清洁

1、每次使用后，需清洗所用的附件，以防积污结垢。
2、长期不用时，附件需清洁烘干，存放在面包机的桶内。

使用环境

1、适用温度范围 –10°C ～ 40°C；
2、空气相对湿度在95% 以下（温度为25°C时）；
3、储存温度 – 40°C ～ 60°C；
4、周围空气中应无易燃性、腐蚀性气体，或导电尘埃的存在。

注意事项

电源供应：

1、面包机属大功率家用电器，需配专用插座。
2、安装时，请查核所用的电表、电线、插座和保险盒等，需满足线路额定负载电流大于3A要求。电源规格：220V/50Hz。

绝缘接地：

面包机属于Ⅰ类家用电器，必须可靠接地。接地线和零线应严格区分，严禁将三线插座中的零线和接地线搭接在一起。

使用方面：

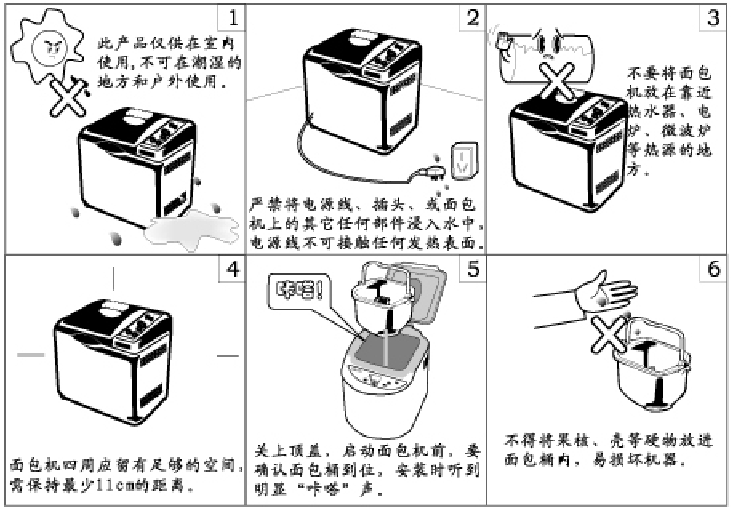

安全方面

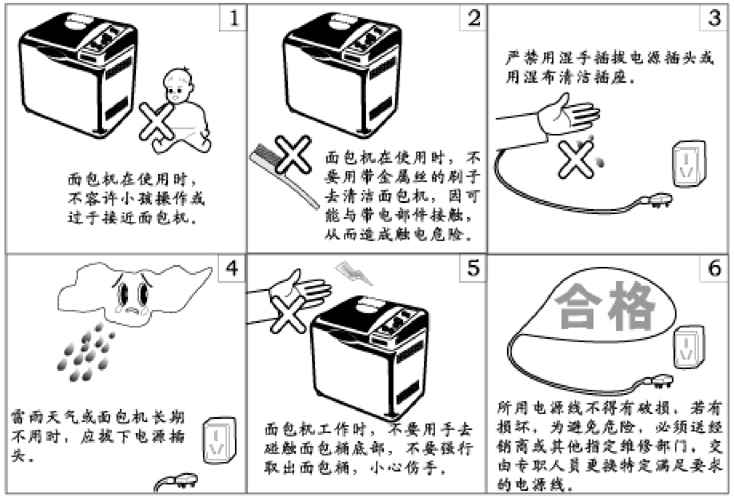

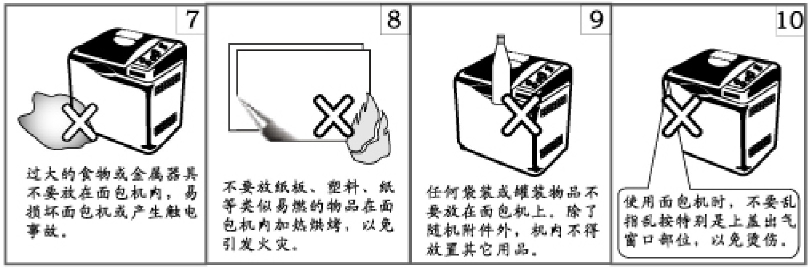

疑难解答

申明：本疑难解答仅供您在使用过程中参考，如果怀疑机器有损坏，为避免危险和更大损失，请及时送往维修点检修或拨打咨询热线解决。如果在使用中有疑问，欢迎来电咨询。

故障现象	需确认的事蝶	解决方法
面包机不工作	“菜单”是否选定	按“菜单”键选定所需的功能和时间
	电源是否接通	设定“菜单”后，应按压“启动/停止”键才能开始工作
	元器件是否损坏	联络维修部检修
	是否延时工作	液晶显示“：”闪烁，已经开始倒计时工作
	是否刚做完面包，机内温度过高	强制冷却至室温
有异声	果核等	停止使用，清除蛋壳，果核等杂物后再开机
	面包桶是否卡到位	将面包桶卡到位
漏电	接地是否正确	停止使用，即送维修部进行检修
有异味	机内和附件是否清洁 电源线是否损坏	清洁干净并烘干后使用 避免电源线接触发热物体
面包生熟不一致	面包夹生	加水过少或加入的水温过高（开水）
	面包配比不正确	请参照推荐“菜谱”合理配料

面包制作快速入门

注意：使用量杯时一杯不是满杯，请按照刻度线加料（详见第8页"量杯刻度示意图"）；量匙两端分别为大勺和小勺。

假定当前时间时晚上8：30，希望明天早上7：00吃上热的500克，颜色烤得浅一点得甜味面包。

1)开机器包装，取出并放好说明书，清洁面包桶、搅拌棒、量杯及量勺等附件。

2)将搅拌棒正确插入面包桶内旋转轴。

3)按照说明书推荐菜谱"甜味面包"项500克一栏配料，注意一定先防水，盐放到水里，最后放发酵粉，发酵粉放在面粉上，不要沾到水。

4)将面包桶放回面包机内，注意压到位，盖好上盖。

5)将插头插入电源，显示屏上出现"1：P"，3秒钟后转变为"3：00"。

6)按"菜单"键3下，直到屏幕上出现"4：P"（即甜味面包程序）

7)按"重量"键，让重量指示标记跳到显示屏左侧指示面板上"500克"的位置。

8)按"烧色"键，让烧色指示标记跳到显示屏下侧指示面板上"浅"的位置。

9)*计算时间，晚上8：30，到明天早上7：00共10小时30分钟。

10)*按" ▼ "键一次，显示时间跳变到"13：00"，继续按，直到显示时间为"10：30"时停止。

屏幕显示时间＝制作完成时间＝希望完成时刻－现在时刻

11)如果不需要预约延时则不需要上面注"* "的两点。

12)按"启动／停止"键，听到蜂鸣提示音同时可看到"："开始闪烁，面包机开始倒计时工作（如果使用预约延时功能，此时没有任何和面动作，不用担心，机器已经工作）。

13)第二天早上看到面包烤好后，按住"启动／停止"键约1秒钟，直到听到蜂鸣提示声，结束面包机的保温工作，"："停止闪烁。

14)戴隔热手套，提出面包桶，将面包倒出。

15)观察搅拌棒有无粘附在面包内部，如有，请用取物钩轻轻将其取出，然后放回面包桶内待清洗。

公司简介 产品特点 执行标准 构件名称 电器原理图 技术规格 注意事项 操作指南 清洁及保养 繁体及英文

OPERATING INSTRUCTION SECTION

IMPORTANT SAFEGUARDS

WHEN USING ELECTRICAL APPLIANCES, BASICA SAFETY PRECAUTIONS SHOULD ALWAYS BE FOLLOWED, INCLUDING THE FOLLOWING:

1. Read all instructions carefully.
2. Do not touch hot surfaces. Use handles or knobs and a potholder. Do not close or clog the steam vent openings under any circumstances.
3. To protect against electrical shock, do not immerse cord, plug, or any other part of this bread machine, in water or other liquid.
4. Close supervision is necessary when any appliance is used by or near children.
5. Unplug the power supply cord when the appliance is not in use, or before cleaning. Allow to cool before putting on or taking off any parts.
6. Do not use or operate the appliance with a damaged cord or plug, or after the appliance malfunctions or has been damaged in any manner. Return appliance to the nearest authorized service facility for examination, repair or adjustment.
7. The use of accessory attachments not recommended or sold by the manufacturer may cause injuries.
8. Do not use outdoors.
9. Do not let the power supply cord hang over the edge of table or counter, or touch hot surfaces.
10. Do not place the appliance on or near hot gas or electric burners, or in a heated oven.
11. Extreme caution must be used when moving an appliance containing hot contents or liquids.
12. To disconnect, press STOP, then remove plug from wall outlet. Grip plug and pull from wall outlet. Never pull on the cord.
13. Do not use the bread machine for other than intended use.
14. Avoid contact with moving parts during operation.
15. Do not pour any ingredients directly into the bread machine-only into the baking pan. The baking pan must then be placed in the machine.
16. Do not operation this appliance in the presence of explosive and/or flammable fumes.
17. This appliance is intended for HOUSEHOLD USE ONLY and not for commercial industrial use.
18. To avoid damaging the machine, do not place the baking pan or any object on top of the unit.
19. Do not clean with scouring pads. Pieces can break off the pad and touch electrical parts, creating a risk of electrical shock.
20. Do not use bread machine for storage purposes nor insert any utensils, as they create a fire or electrical shock.

SAVE THESE INSTRUCTIONS, FOR HOUSEHOLD USE ONLY

A short power-supply cord is provided to reduce the risk of becoming entangled in or tripping over a longer cord. An extension cord may be used if precautions are taken in their use. If an extension cord is used:

1.The marked electrical rating of the extension cord should be at least as great as the electrical rating of the appliance, and

2.The cord should be arranged so that it will not drape over the counter top or tabletop where it can be pulled on by children or tripped over accidentally.

About Your Bread Machine

1. The bread machine makes REGULAR (1 lb.) or LARGE (1.5 lb.) loaves of breads.
2. Special ULTRA FAST setting allows you to complete the bread making process in 58 minutes. Special recipes must be used for this cycle.
3. The Fruit and Nut Beep signals when it is time to add ingredients, such as fruits, nuts, or chips. It will maintain ingredients' shape and texture rather than be chopped up by the kneading bade. If you use the

OPERATING INSTRUCTION SECTION

TIMER to delay baking, you may add all the ingredients at once and bypass the function. However, the fruits, nuts, or chips may get somewhat chopped.
4. The crust color of your fresh homemade bread can be controlled for personal preference.
5. 13-HOUR PROGRAMMABLE TIMER lets you wake up to hot baked bread in the morning.
6. Large VIEWING WINDOW allows you to watch the bread making process.
7. The KEEP WARM function prevents the bread from getting soggy by keeping finished bread warm up to an hour after the baking is completed. This function stops when the unit is turned OFF/STOP or is unplugged.
8. The bread machine has POWER LOSS MEMORY, which resumes cycle where it left off when a short-term power loss occurs.
9. Do not place any objects on top of the bread machine.
10. Unplug the unit and wait until it cools, then remove any spilled ingredients or crumbs from the baking chamber of the bread machine by wiping with a damp sponge or clothe. See *Care and Cleaning*.

IMPORTANT: Always add ingredients in the order they are specified in recipe. For best results, **accurate measuring of ingredients is vital.** Do not put large quantities than recommended into the baking pan as it may produce poor results and may damage the machine.

Before Your First Use

Enjoy using your ACA Bread Machine. Before your first use, please take a few minutes to read this Instruction Manual and keep it handy for reference. Please pay particular attention to the safety instructions we have provided for your protection.

Carefully unplug the bread machine and remove all packaging materials. To remove any dust that may have accumulated during packing, wipe the baking pan, kneading bade and outside surface of the bread machine with a clean, damp cloth. **Do not use scouring pads or any abrasives on any part of the bread machine.**

Plug the cord into a 220-volt AC outlet. The cord length of this bread machine was selected to reduce the possibility of tangling or tripping over a longer cord. If more cord length is needed, use a CCC certified extension cord rated no less than 3 amperes and 220 volts. The longer cord should be arranged so that it will not drape over the countertop where it can be pulled on by children or tripped over.

TABLE OF CONTENTS

OPERATING INSTRUCTION SECTION
Important Safeguards 17
About Your Bread Machine 17
Before Your First Use 18
KNOW YOUR BREAD MACHINE
Exploded Diagram 19
Control Panel 19
Setting Descriptions 20
Functions 21
Accessories 22
Using Your Bread Machine 22
Using the Timer 24
Slicing and Storing Bread 25
Care and Cleaning 25
Know Your Ingredients 26
Measuring Your Ingredients 28
Recipe Tips 29

KNOW YOUR BREAD MACHINE

RECIPE SECTION 29

HELP SECTION

Troubleshooting 31

Questions & Answers 32

Limited Warranty 35

Exploded Diagram

1. Bread Pan Handle	2. Driver Shaft	3. Bread pan	4. Baking Chamber
5. Cool Touch body	6. Measuring Cup	7. Measuring spoon	8. Radiator Hole
9. Control Panel	10. Lid	11. Kneading Blade	12. Bread hook

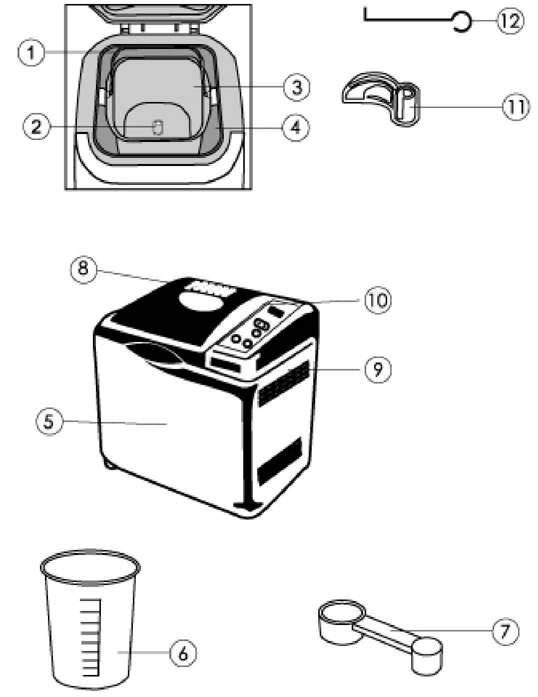

Control Panel

KNOW YOUR BREAD MACHINE

Setting Descriptions

NOTE: When using the touch pad controls, be sure to press the pad until you hear a beep.

1. DISPLAY WINDOW

Shows the MENU number selected.
Shows the LOAF size selected.
Shows the CRUST COLOR selected.
Shows minute-by-minute baking time countdown.
Shows DELAY BAKING TIME selected.

2. TIMER

Use when setting the TIMER to delay baking.
Press ▲ and ▼ arrows to set timer for delayed completion up to 13 hours later.
Arrows will move time up or down in 10-minute increments. Press and hold button for faster movement.
TIMER is not available on some cycles, please check the bread machine cycle times.

3. MENU

Press to select the baking cycle of your choice. The selected cycle automatically assigns the time needed to complete the process.

4. COLOR

Press to select the crust color. Light "L", Medium "P", Dark "H".

5. LOAF

Press to select the loaf size: REGULAR (1 lb.), or LARGE (1.5 lb.).

6. START/STOP

Press to start operation or begin TIMER countdown for delay completion.
Press and hold about 1 second until you hear a beep to stop operation or to cancel a TIMER setting.

Note: Do not press "STOP" when checking the progress of bread.

Follow this flow chart to make bread as easy as 1, 2, 3.

MENU —— COLOR —— LOAF —— TIMER —— START

- Press MENU key to select the desired baking cycle.
- Press COLOR key to select the crust color preferred.
- Press LOAF key to select the desired bread size.
- Press TIMER key to have bread machine bake up to 13 hours in advance.
- Press START key to begin baking.

BASIC BREADS

The settings are used for breads that primarily use white flour, although some recipes may include small amounts of whole wheat four. The settings have the minimum number of rising cycles and the shortest overall times until baking is completed. Therefore, loaves will be slightly denser than French or Sweetbreads. Choose from Basic settings, according to loaf size and crust color.

WHOLE WHEAT/MULTI-GRAIN

The settings are used for recipes with significant amounts of whole or rye flour, oats, or bran. It begins with a rest period during which the flours or grains absorb the liquid ingredients.
Soaking causes the flour or grain to soften and helps ingredients to combine well. The settings have an extra rise cycle to allow heavy wheat and grains to expend. Generally, whole wheat and multi-grain breads are shorter and denser than basic, French, or sweet breads. Choose from WHOLE WHEAT settings.

公司简介 产品特点 执行标准 构件名称 电器原理图 技术规格 注意事项 操作指南 清洁及保养 繁体及英文

KNOW YOUR BREAD MACHINE

SPECIALTY

FRENCH
Traditionally, French bread has a crispier crust and lighter texture than basic breads. Recipes usually do not include butter, margarine, or milk.

SWEET
Use this setting for recipes that use fruit juice, additional sugar, or added sweet ingredients such as coconut flakes, raisins, dried fruit, or chocolate. Baking temperature is reduced to prevent burning and the extra rise cycle gives the loaves a light, airy texture.

ULTRA FAST
This setting is designed to make bread in only 58 minutes. Only specially designed recipes are appropriate for this setting. These recipes call for very warm water and a large amount of bread machine or fast rising yeast. Heavy flours and other heavy ingredients are not suitable for this setting.

QUICK BREAD
This setting is used for recipes that contain baking soda rather than yeast to make bread.

DOUGH
This setting only makes dough and will not bake the final bread.
Remove the dough and shape it to make pizza, rolls, pretzels, doughnuts, and round or braided breads. Then bake in a conventional oven or fry in a deep fryer (i.e. doughnuts).

BAGEL DOUGH
This setting is a special dough setting for bagels only and will not bake the final bread. Remove the dough and follow the recipe for making bagels.

EUROPEAN
Use this setting to make dark European breads such as Swedish Limpa, Russian Black Bread, Pumpernickel, etc.

JAM
Use this setting for making jam from fresh fruits. Do not double recipes or allow ingredients to boil over the pan into the baking chamber.
Should this happen, stop the machine immediately. Allow cooling and cleaning thoroughly.

BAKE
This setting is especially helpful when making gluten-free breads. After the first rise, stop the machine and cancel the cycle by pressing the STOP key until it beeps. Set the machine to the BAKE setting and press the START key.

Functions:

Power Loss Memory
The bread machine has power loss memory, which resumes cycle where it left off when a short-term power loss occurs, if it is less than 15 minutes. The real working time will different from the original setting time.

The real working time=original setting time + the time of power loss

Note: If the time of power loss is longer than 15 minutes, the baker can't resume to the original working statue.

KNOW YOUR BREAD MACHINE

WARNING:
- Place your bread machine where it is level, stable, and secure.
- Ingredients spilled in baking chamber can cause fire when ignited by the heating element.

2. Attach the kneading blade onto the shaft inside the baking pan by lining up the flat side of the blade firmly onto the shaft.
   - Be sure to set the kneading blade firmly in place to prevent blade from coming off during operation, which may affect the kneading or mixing.
   - Be sure the shaft is clean of any residue (i. e. dough). This will ensure the kneading blade will fully seat into place and will prevent blade from sticking to shaft.
3. Select a recipe from the recipe section of this booklet. When following the recipes:
   - **Measure ingredients carefully and accurately.** To measure liquids use a see-through liquid measuring cup and check the measurement at eye level. When measure dry ingredients, use the other cup and level the ingredients with a straightedge knife. **Slightly inaccurate measurement can make a difference in results.** Use standard measuring spoons and level off with a straightedge knife.
   - **Always add ingredients into the baking pan in the order listed.**
   - **Always add yeast last. Be sure the yeast does not touch the liquid ingredients.**
   - Be careful not to mix the yeast with any of the wet ingredients, especially when using the delay timer feature. Otherwise, the bread may not rise properly.
   - **Bread making Tip:**
     After 5 minutes of kneading, open the lid of the bread machine and check the dough consistency. The dough should form a soft, tacky ball. If too dry, add liquid. If too wet, add flour (1.5 to 1 tablespoon at a time).

4. Place the baking pan back into the unit. Push down on the pan until you hear it click firmly into place. Fold the handle down.
   Special Note:
   If the baking pan is not installed properly or firmly clicked into place, the kneading blade will not operate.
5. Close the lid. Connect the plug to a 220-volt AC-only outlet. You will hear a beep and the display will be blank.
6. Choose the correct setting for your recipe by pressing the MENU button. Each time MENU is pressed, you will hear a beep and the number in the display window will advance to the next cycle.
   Special Note:
   The whole wheat settings begin with a rest period during which the flours or grains absorb the liquid ingredients. Soaking causes the flour or grain to soften and helps ingredients to combine well. There is no blade action during this period.
7. Press the COLOR button to choose crust color desired. There are three choices: Light, Medium, or Dark. When you press the button, you will hear a beep, and the display window will show the color selected.
   Note:
   L means Light color, P means Medium color, H means Dark color.
8. Press the LOAF button to choose the desired loaf size. When you press the button, you will hear a beep, and the display window will show the size of the loaf selected.
   Special Note:
   Only menu 1 to 4 can select loaf size.
9. Press the TIMER button to delay the completion of your bread for up to 13 hours. For details see *the Using the Timer*.
   Special Note:
   For some cycles, there is no timer setting. See *bread machine cycle times.*
10. Press the START/STOP button to begin. The remaining time will count down in one-minute increments. When the baking time is completed, a beep will sound five times.

KNOW YOUR BREAD MACHINE

Breadmaking Tip:
After 5 minutes of kneading, open the lid of the bread machine and check the dough consistency. The dough should form a soft, tacky ball. If too dry, add liquid. If too wet, add flour (1.5 to 1 tablespoon at a time).

11.The bread machine is desired with a Keep Warm feature that automatically begins when the bake time is completed. This will continue for up to 60 minutes after baking is complete. During this time, the bread machine will circulate hot air to keep the bread warm and there will be 5 beeps every 5 minutes. You may remove the baking pan at any time during the Keep Warm cycle. To turn off the Keep Warm feature before the 60 minutes are up, simply press the STOP button and hold it about 1 second until you hear a beep. UNPLUG THE UNIT WHEN FINISHED. Never leave the unit plugged in when not in use.
Note: The Keep Warm feature does not function on some cycles. See *bread machine cycle times*.

12. The bread machine has a convenient viewing window so that you may watch the progress of the bread as it is mixed, kneaded, and baked. Occasionally, some moisture may form in the window during baking. You may lift the lid to look inside during mixing and kneading stages. However, DO NOT OPEN THE LID DURING THE BAKING CYCLE, (approximately the last hour) as this may cause the bread to collapse.
Warning: To avoid damaging the bread machine, do not put any object on top of the unit.

13. To remove the bread from the baking pan, use potholder or oven mitts or glove and pull straight up on the handle. Turn the pan upside down and shake the bread out onto a wire cooling rack. The baking pan has a non-stick finish so the bread should come out easily. Do not use metal utensils to remove bread as they may scratch the non-stick surface. If you have difficulty removing bread from the baking pan, slide a flat rubber or plastic spatula along the sides of the pan to loosen the loaf. Turn the pan over and shake the loaf out.
Allow the bread to cool before slicing. See *Slicing and Storing Bread*. if the kneading blade remains in the bottom of the baking pan, fill the baking pan with hot water to loosen. If the kneading blade remains in the bottom of the bread, use the bread hook to remove it carefully. Do not use a knife or any other sharp metal object, as it will scratch the non-stick coating on the kneading blade.
Note: Always check to see where the kneading blade is when removing a baked loaf of bread. If it remains stuck in the bread, you may damage it by cutting into it while slicing.
Important: Place warm water in pan immediately after removing bread to prevent blade from sticking to shaft.

14. If the temperature in the bread chamber is higher than 40℃， the DISPLAY WINDOW will show E01. If the temperature is lower than -10℃, the DISPLAY WINDOW will show E00.
Warning: Do not make another loaf until the bread machine cools down.

Using the Timer:

Use the TIMER when you want to delay the completion of the bread for up to 13 hours. For example, you can set the TIMER at 7 p.m. so that you can wake up to fresh bread by 8 a.m. the following morning.

TO SET THE TIMER, FOLLOW THESE INSTRUCTIONS:

NOTE: First, follow steps 1 thru 8 in using your bread machine. Do not use the TIMER with recipes that call for perishable ingredients, such as eggs, fresh milk, sour cream, or cheese.

1. To set the TIMER, decide when you want the bread to be finished. For example, set the TIMER at 7 p.m. if you want to wake up to fresh-baked Sweet bread at 8 a.m., a total of 13 hours before the bread is complete. Once the correct setting is selected for the recipe, simply set the TIMER for the total program hours, in this example, 13 hours.
2. You do not need to mathematically calculate the difference between the setting time and the total hours you want. The machine will automatically adjust to include the setting time. If you pass the desired time, simply **press ▼ to go back.**

KNOW YOUR BREAD MACHINE

3. Once you have set the time, press START. The colon (:) in the display will flash to indicate that the TIMER has been set, and the countdown will begin. The TIMER will count down in one-minute increments. When the display reaches 0:00, your bread is complete and the beeper will sound.

SLICING AND STORING BREAD

For best results, place bread on a wire rack and allow it to cool 15 to 30 minutes before slicing. Use an electric knifefor even slices or use a sharp serrated knife. For square slices, place the loaf on its side and slice across.

Store unused bread tightly covered (reclosable plastic bags or plastic containers work well) at room temperature for up to three days. For longer storage (up to one month), place bread in a tightly covered container in the freezer. Since homemade bread has no preservatives, it tends to dry out and become stale faster than commercially-made bread.

Leftover slightly hardened bread may be cut into 0.5-inch or 1-inch cubes and used in recipes to make croutons, bread pudding, or stuffing.

CARE AND CLEANING

CAUTION:
To prevent electrical shock, unplug the unit before cleaning. Allow the bread machine to cool before cleaning. Do not immerse or splash either the body or lid in any liquid as this may cause damage and/or electric shock.

For best performance and maintenance, clean the bread machine after each use as follows:
Outer Body, Lid, and Baking Chamber:
Wipe the lid and outer body of the unit with a damp cloth or slightly damp sponge. Use a damp sponge or cloth to wipe out any flour, crumbs, or other materials from the baking chamber. Dry thoroughly.

Baking Pan and Kneading Blade:
Both the baking pan and kneading blade have non-stick surfaces. Do not use any harsh cleansers, abrasive materials or utensils that may scratch the surfaces. Over time, the non-stick surface may change in appearance due to moisture and steam. This is normal and has no effect on its use or quality.
Remove the baking pan and kneading blade from the baking chamber before cleaning. Wipe the outside of the baking pan with a damp cloth.
NEVER IMMERSE THE BAKING PAN in water or other liquid. Wash the inside of the baking pan with warm, soapy water. If the kneading blade gets stuck, fill the baking pan with hot water and soak for 30 minutes or until it loosens and can be removed easily. If the hole in the kneading blade becomes clogged, carefully clean it out with a wooden or plastic toothpick. **Use care to avoid toothpick scratching blade surface or getting stuck in blade.**

Never use any of the following to clean your bread machine:
Paint Thinner. Benzine. Steel Wool Pads. Polishing Powder. Chemical Dustcloth.
Caution:
DO NOT place any part or parts of the bread machine in the dishwasher.

STORING THE UNIT

Be sure to dry all parts before storing including the viewing window. Close the lid, and do not store anything on top of the bread machine.

KNOW YOUR BREAD MACHINE

TROUBLESHOOTING

Specific questions about the bread machine functions and problems with ingredients or recipes are addressed in the Questions and Answers section . for better performance, allow the unit to cool completely before beginning to bake a second loaf of bread. You can speed cooling by opening the lid, removing the baking pan, and allowing the baking chamber to cool.

BREAD MACHINE CYCLE TIME

Setting	1		2		3		4	
	Basic		Whole wheat		French		Sweet	
Cycle	1lb.	1.5lb.	1lb.	1.5lb.	1lb.	1.5lb.	1lb.	1.5lb.
Total Time	2:50	3	4	4:10	3:40	3:50	2:40	2:50
Keep Warm	60min.		60min.		60min.		60min.	
Delay Timer	13:00		13:00		13:00		13:00	

Setting	5	6	7	8	9	10	11
Cycle	Ultra Fast	Quick	Dough	Bagel Dough	Euro-pean	Jam	Bake
Total Time	58min.	1:43	1:30	1:50	3:30	1:05	60min.
Keep Warm	60min.	60min.	N/A	N/A	60min.	N/A	60min.
Delay Timer	N/A	N/A	N/A	N/A	13:00	13:00	N/A

KNOW YOUR INGREDIENTS

It is often said that cooking is an art relying on the creativity of the chef, while baking bread is much more of a science. This means that the process of combining flour, water and yeast results in a chemical reaction that produces bread. You have to remember that when the ingredients combine with each other they produce a specific result. Read the following information carefully to gain a better understanding of the importance each ingredient plays in the bread making process.

1.**ALL-PURPOSE FLOUR**

All-purpose flour is a blend of refined hard and soft wheat flours especially suitable for making breads and cakes. The most popular brands of flour have been tested for quick bread in The Bread Machine by ACA with excellent results.

2.**BREAD FLOUR**

Bread flour is a high gluten/protein flour that has been treated with conditioners to give dough a greater tolerance during kneading. Bread flour typically has a higher gluten concentration than all purpose flour. Using bread flour with the bread machine will produce loaves with better volume and structure.

3.**WHOLE WHEAT FLOUR**

Whole wheat flour is milled from the entire wheat kernel, which contains the bran and germ. Whole wheat flour is heavier and richer in nutrients than all-purpose flour. Breads made with this flour are usually smaller and heavier than white loaves. Many recipes mix whole wheat flour with bread flour or gluten to produce a high, light-textured bread.

4.**RYE FLOUR**

Rye flour is a high fiber flour similar to whole wheat flour, also called graham flour. Rye flour must always be mixed with a high proportion of bread flour, as it does not contain enough gluten to develop the structure for a high, even-grained loaf.

5.**GLUTEN**

Gluten is wheat flour that has been treated to remove nearly all the starch, which leaves a very high gluten content. (Gluten is the protein in the wheat that makes the dough elastic). Gluten is available at most health food stores.

KNOW YOUR BREAD MACHINE

It is sometimes used in small portions with dense, low-gluten flours (such as whole wheat) to increase volume and lighten texture.

6.**CAKE FLOUR**

Cake flour is made from softer or lower protein wheats and is specially designed for use in cake recipes.

7.**SELF-RISING FLOUR**

Self-rising flour contains leavening ingredients that will interfere with bread and cake making. It is not recommended for use with your bread machine.

IMPORTANT NOTE ON FLOURS

Flours, while visibly similar, can be very different by virtue of how they were grown, milled, stored, etc. you may have to experiment with different breads of flour to help you make the perfect loaf. See the *Baking Ttips Guide* to assist with these experiments.

Storage of flour is also very important. Keep flour in a secure, airtight container. Rye and whole wheat flours should be stored in a refrigerator, freezer, or a cool area to prevent them from becoming rancid.

8.**BRAN**

Bran (unprocessed) and wheat germ are the coarse outer portions of the wheat or rye grains separated from flour by sifting or bolting. They are often added in small quantities to bread for nutritional enrichment, heartiness and flavor. They are also used to enhance bread texture.

9.**CORNMEAL AND OATMEAL**

Cornmeal and oatmeal come from coarsely ground white or yellow corn and from rolled or steel-cut oats. They are used primarily to enhance the flour and texture.

10.**CRACKED WHEAT**

Cracked wheat has a very coarse texture. It comes from wheat kernels cut into angular fragments. It gives whole grain breads a nutty flavor and crunchy texture.

11.**SEVEN GRAIN CEREAL BLEND**

Seven grain cereal blend is a blend of cracked wheat, oats, bran, rye, corn meal, flax seeds and hulled millet.

12.**YEAST**

Yeast, through a fermentation process, produces gas (carbon dioxide) necessary to make the bread rise. Yeast feeds on sugar and flour carbohydrates to produce this gas. Traditional active dry granular yeast is used in all recipes that call for yeast. Three different types of yeast are available: fresh (cake), dry, and quick acting. Bread machine yeast is quick acting. For best results, use traditional dry yeast. However, quick rising yeast can also be used in smaller amounts.

Note: The recipes in this booklet were developed using traditional dry yeast.

Always store yeast in a refrigerator to keep it fresh as heat will kill it. Ensure your yeast is fresh by checking its expiration date. Once a package or jar of yeast is opened, it is important that the remaining contents be immediately resealed and refrigerated for future use. <u>Often bread or dough that fails to rise is due to stale yeast.</u>

The following test can be used to determine if your yeast is stale and inactive:

- ●Place 1/2 cup of lukewarm (40℃~45℃) water into a liquid measuring cup.
- ●Stir 1 teaspoon of sugar into the water and then sprinkle 2 teaspoons of yeast over the surface.
- ●Place cup in a warm area and allow to sit for 10 minutes undisturbed.
- ●The mixture should foam and rise to the 1-cup mark. If this does not occur, discard this yeast and purchase fresh yeast.

Conversion Chart for Fast-Rising Yeast

1 teaspoon active dry yeast = 3/4 teaspoon quick-rising yeast
1.5 teaspoon active dry yeast = 1 teaspoon quick-rising yeast
2.25 teaspoon active dry yeast = 1.5 teaspoon quick-rising yeast
1 tablespoon active dry yeast = 2 teaspoon quick-rising yeast

公司简介 产品特点 执行标准 构件名称 电器原理图 技术规格 注意事项 操作指南 清洁及保养 繁体及英文

KNOW YOUR BREAD MACHINE

13.**SUGAR**

Sugar is important for the color and flavor of breads. It also serves as food for the yeast as it supports the fermentation process. Recipes in this book that call for sugar require granulated sugar. Do not substitute powdered sugar unless indicated. Artificial sweeteners cannot be used as a substitute for sugar as the yeast will not react properly with them.

14.**SALT**

Salt is necessary to balance the flavor of breads and cakes, as well as for the crust color that develops during baking. Salt also limits the growth of yeast. Do not increase amount of salt shown in the recipes. For dietary reasons, salt may be eliminated. However, the bread may overproof and rise higher than normal.

15.**LIQUIDS**

Liquids, such as milk (1%, 2%, whole, and skim), water, or a combination of powdered milk and water, can be used when making bread. Milk will improve flavor, provide a velvety texture and soften the crust, while water alone will produce a crispier crust. Some recipes call for juice (orange, apple, etc.) to be added as a flavor enhancer.

16.**EGGS**

Eggs add richness and a velvety texture to bread dough and cakes. Use large-size eggs with these recipes.

17.**FATS: SHORTENING, BUTTER, AND OIL**

Shortening, butter, and oil shorten or tenderize the texture of yeast breads. French bread gets its unique crust and texture from the lack of fat added. However, breads that call for fat stay fresh longer. If butter is used directly from the refrigerator, it should be cut into small pieces for easier blending during the kneading cycle.

18.**BAKING POWDER**

Baking powder is a leavening agent used in quick breads and cakes. This type of leavening agent does not require rising time before baking as the chemical reaction works when liquid ingredients are added.

19.**BAKING SODA**

Baking soda is another leavening agent not to be confused or substituted for baking powder. It also does not require rising time before baking as the chemical reaction works during process.

MEASURING YOUR INGREDIENTS

The most important step when using your bread machine is measuring your ingredients. It is very important to measure each liquid and dry ingredient accurately. Mismeasuring, even slightly, can cause poor baking results. The ingredients must also be added into the baking pan in the order given each recipe.

Liquid Measurements

Use the transparent plastic measuring cup to measure all liquid ingredients. Place the cup on a horizontal flat surface and view markings at eye level. The liquid line must be aligned to the mark of measurement.

A guesstimate is not good enough as it could throw off the critical balance of the recipe.

Dry Measurements

Dry ingredients must be measured using standard size dry measuring cups (there are two cups). These cups are available in various sizes.

Gently spoon dry ingredients into the measuring cup and level off with a knife. Do not scoop or tap a measuring cup as this will pack the ingredients. This extra amount could affect the balance of the recipe. Do not sift the flour.

When measuring small amounts of dry or liquid ingredients (i.e. yeast, sugar, salt, dry milk, honey, or molasses) a standard measuring spoon must be used. Measurements must be level, not heaping.

The bread machine produces delicious baked goods with ease. This marvelous machine asks only that you carefully follow the recipe instructions. In most cooking, a pinch of this and dash of that is fine, but not for automatic bread machines. Using a bread machine correctly requires you accurately measure each ingredient.

RECIPE TIPS

Creating Your Own Yeast Breads

With the ACA Bread Machine, even the most inexperienced baker can achieve the satisfying experience of baking a loaf of bread. All of the mystery and hard work is gone. Inside this talented machine with a computer brain, the dough is mixed, kneaded, proofed, and baked without you being present. The bread machine can also prepare dough for you to shape and bake in a conventional oven. The recipes included with this book are □tailored□ for this ACA Bread Machine. Each recipe features ingredients that best compliment a loaf of bread, and each was tested in our machines. It is extremely important not to exceed the amounts of flour specified in each of the recipes or this could result in unsatisfactory baking performance. When creating your own yeast bread recipes or baking an old favorite, use the recipes in this cook-book as a guide for converting portions from your recipe to your bread machine.

Special Glazes for Yeast Breads

Give your just-baked bread a professional finish. Select one of the following special glazes to enhance your bread:

Egg Glaze:

Beat 1 large egg and 1 tablespoon of water together, brush generously over dough.

Note: Apply only to breads made using the dough setting just before baking.

Melted Butter Crust

Brush melted butter over just-baked bread for a softer, tender crust.

Milk Glaze

For a softer, shiny crust, brush just-baked bread with milk or cream.

Sweet Icing Glaze

Mix 1 cup sifted icing sugar with 1 to 2 tablespoons of milk to make a consistent glaze. Drizzle over Raisin Bread or Sweet Breads when almost cool.

Poppy/Sesame/Caraway Seed

Generously sprinkle your choice of these seeds over just-glazed bread.

RECIPES

BASIC WHITE BREAD

	1.5 lb. Loaf	1 lb. Loaf
Water	1 cup + 3 tablespoons	1/2 cup + 7 tablespoons
Oil	2 tablespoons	1 tablespoons
Salt	1 1/2 teaspoons	1 teaspoons
Sugar	2 tablespoons	1 1/2 tablespoons
Dry milk	1 tablespoon	1 tablespoon
Bread Flour	3 1/4 cups	2 1/4 cups
Bread Machine Yeast	1 5/6 teaspoons	1 1/4 teaspoons

WHOLE WHEAT BREAD

	1.5 lb. Loaf	1 lb. Loaf
Water	1 cup + 3 tablespoons	3/4 cup + 3 tablespoons
Oil	2 tablespoons	2 tablespoons
Salt	1 teaspoons	1 teaspoons
Red Sugar	4 tablespoons	4 tablespoons
Dry milk	3 tablespoons	2 tablespoons
Whole Wheat Flour	3 1/4 cups	2 3/4 cups
Bread Machine Yeast	1 1/3 teaspoons	1 teaspoons

RECIPES SECTION

FRENCH BREAD

	1.5 lb. Loaf	1 lb. Loaf
Water	1 cup + 2 tablespoons	3/4 cup
Oil	1 tablespoons	1 tablespoons
Lemon Juice	1 teaspoon	1 teaspoon
Salt	1 1/4 teaspoons	3/4 teaspoons
Sugar	1 tablespoons	1 tablespoons
Bread Flour	3 1/4 cups	2 1/4 cups
Bread Machine Yeast	1 1/3 teaspoons	1 1/3 teaspoons

SWEET BREAD

	1.5 lb. Loaf	1 lb. Loaf
Water	7/8 cup	1/2 cup + 3 tablespoons
Oil	1 tablespoons	1 tablespoons
Salt	1 teaspoons	1/2 teaspoons
Sugar	1/3 cups	1/4 cups
Dry milk	1 1/2 tablespoons	1 tablespoon
Bread Flour	3 1/4 cups	2 1/4 cups
Bread Machine Yeast	1 1/3 teaspoons	1 1/3 teaspoons

ULTRA-FAST BREAD

Warm Water (45~50℃)	7/8 cup
Egg	1~2
Oil	2 tablespoons
Salt	1 teaspoons
Sugar	2 tablespoons
Dry milk	2 tablespoons
Bread Flour	3 cups
Bread Machine Yeast	4 teaspoons

EUROPPEN BREAD

Water	1 cup + 3 tablespoons
Oil	2 tablespoons
Salt	1 1/2 teaspoons
Sugar	4 tablespoons
Dry milk	3 tablespoons
Bread Flour	3 1/4 cups
Bread Machine Yeast	3 1/3 teaspoons

QUICK BREAD

	Recipe Ⅰ		Recipe Ⅱ
Orange Juice	3/5 cups	Milk	1 cup
Oil	2 tablespoons	Oil	3 tablespoons
Salt	1 teaspoon	Salt	1 teaspoons
Sugar	3/4 cup	Sugar	3/4 cup
Egg	1	Egg	1
Baking Soda	1/4 teaspoon	Walnet Powder	1 cup
Almond Granute	1 cup	Orange Juice	1 cup
Baking Flour	2 teaspoons	Baking Flour	3 1/2 teaspoons
Bread Flour	2 cups	Bread Flour	2 1/2 cups

RECIPES SECTION

DOUGH

Water	3/4 cup
Oil	4 tablespoons
Egg	2
Salt	1 1/3 teaspoons
Sugar	4 tablespoons
Bread Flour	4 cups

BAGEL DOUGH

Water	2/5 cup
Oil	1 1/2 tablespoons
Salt	1 1/2 teaspoons
Sugar	1 tablespoons
Egg	1
Bread Flour	2 1/2 cups
Bread Machine Yeast	1 1/2 teaspoons

JAM

1 16-ounce package frozen, unsweetened strawberries, crushed and thawed
1 1.75-ouce package dry pectin
1 1/2 cups sugar
1 tablespoon lemon juice

Place ingredients in bread pan in the order listed. In jam-making, sugar needs to dissolve completely. If necessary, use a rubber spatula to stir ingredients.

When cycle is completed, remove the pan from machine. Mixture will be VERY HOT.

Using a metal spoon, skim off, and discard foam from top. Pour jam into sterilized jars or containers. Refrigerate or freeze.

For other fruit-flavored jams, substitute desired fruit for the strawberries. Follow same basic recipe.

HELP SECTION

Troubleshooting

Checking dough consistency

Although the bread machine will mix, knead, and bake bread, it is absolutely necessary that you learn to recognize the condition of you dough. The ratio of flour to liquid is the most critical factor in any bread recipe, yet most easily remedied. It is alright to open the machine to check the dough's consistency. Do this after about five minutes into the KNEAD cycle. The dough should be in a soft, tacky ball. If it is too dry, add liquid 1/2 to 1 tablespoon at a time. If it is too wet, add 1 tablespoon of flour at a time.

Cratered Bread

If the top of the loaf caves in, this is a sign of too much moisture. You may need to make recipe adjustments, such as reducing liquid or adding flour, 1/2 to 1 tablespoon at a time. Cratered bread may also occur, to varying degrees, with cheese bread because each cheese has a distinct moisture content.

公司简介 产品特点 执行标准 构件名称 电器原理图 技术规格 注意事项 操作指南 清洁及保养 繁体及英文

HELP SECTION

Mushroom Bread
Mushroom bread may be caused by too much yeast or too much water. Also, you may be using too much dough for the pan size. Check your recipe to make sure the total amount of flour does not exceed 4+1/3 cups.

Gnarly Loaves
The dough probably needs more moisture. See *Checking Dough Consistency,* above.

High-Altitude Baking
In high-altitude areas, dough tends to rise faster as there is less air pressure. Therefore, less yeast is necessary. In dry climates, flour is wetter and will absorb less liquid. Therefore, slightly more flour is required.

Jam
If you find that the jam is not thick enough, repeat the JAM cycle.

The Science of Breadmaking
Most recipes contain sugar in some form for sweetness. In breadmaking, sugar helps start or feed the yeast and promotes browning. Salt, on the other hand, inhibits the yeast, but also adds flavor. With this knowledge in mind, you can control the balance of the chemical reaction between flour, yeast, water, sugar, and salt to make a perfect loaf of bread. The recipes included with this booklet have been tested to work in this bread machine. When using recipes from other sources, you may have to make adjustments for perfect results. Follow suggestions from this guide.

Simple Test To Determine Yeast Activity
Dissolve 1 teaspoon of granulated sugar in 1/2 cup warm water(40-45℃). Sprinkle 1 packet of yeast (about 1 T) slowly over the surface. Stir the yeast, then set a timer for 10 minutes. In 3 to 4 minutes, it will have absorbed enough liquid to activate and will start rising to the surface. If at the end of 10 minutes, the yeast has multiplied to the 1 cup mark and has a rounded crown, it is very active. The yeast mixture may be used in your dough. Remember to deduct the 1/2 cup of liquid from the total used in the recipe.

Questions & Answers

Questions About General Performance And Operation

Q1: How do I make doughnuts using my bread machine?
A1: Use the dough setting to make the dough for the doughnuts. Then shape and fry the doughnuts in a conventional deep fryer.

Q2: What should t do if the kneading blades come out with the bread?
A2: Remove them with care with a crochet hook before slicing the bread. Since the blades can be separated from the pan, it is not a malfunction if they come out in your bread.

Q3: Why does my bread sometimes have some flour on the side crust?
A3: Your dough may be too dry. Next time, check your recipe and measuring. You may need to add more liquid, 1/2 to 1 tablespoon at a time. You can simply trim off that portion of the outer crust.

Q4: Why isn't the dough mixing? I can hear the motor running.
A4: The kneading blades or baking pan may not be inserted properly. Make sure the pan has clicked into place.

HELP SECTION

Q5: How long does it take to make bread?
A5: See *Bread Machine Cycle Times.*

Q6: Why can't I use the timer when baking with fresh milk?
A6: The milk will spoil if left sitting in the machine too long. Perishable ingredients, such as eggs and milk, should never be used with the timer feature.

Q7: If the power goes out in the middle of a cycle, will my bread machine finish baking bread or making dough?
A7: If the power failure is no more than approximately 10 minutes, bread machine resumes cycle where it left off and will finish baking bread or making dough.

Q8: Why do I have to add the ingredients in a certain order?
A8: This allows the bread machine to mix the ingredients in the most efficient manner possible. When using the timer, it also keeps the yeast from combining with the liquid before the dough is mixed.

Q9: When setting the timer for morning, why does the machine make sounds late at night?
A9: The machine must start operation several hours before the bread will be ready. These sounds are made by the motor when kneading the dough. It is a normal operation, not a malfunction.

Q10: What size loaf does the bread machine make?
A10: Your bread machine makes REGULAR (1 lb.) and LARGE (1.5 lb.) loaves of bread.

Q11: The kneading blades are in the bread pan after baking. How do I get them out?
A11: If the blades get stuck, pour hot water into the bread pan. Rotate the kneading blades to clean underneath them. Remove blades and clean inside. See *Care and Cleaning.*

Q12: How many watts is my bread machine?
A12: Please refer to the rating label on the machine.

Q13: Can I wash the baking pan in the baking pan?
A13: No. the baking pan and kneading blades must be washed by hand. Do not immerse the in water.

Q14: What will happen if I leave the finished bread in the baking pan?
A14: The keep warm cycle will keep it warm and prevent it from becoming soggy for 1 hour. If the bread is left in the pan after 1 hour it may start to become soggy.

Q15: Why did the dough only partially mix?
A15: Check to make sure the kneading blades and baking pan are inserted properly. Also, check the dough consistency. After 5 minutes of kneading, check dough. If too dry, add liquid. If too moist, add flour. Only add 1/2 to 1 tablespoon at a time.

Q16: Why didn't the bread rise?
A16: The yeast could be old or expired, or possibly no yeast was added at all. Check to see if you yeast is fresh. Also, check the dough consistency. After 5 minutes of kneading, check dough. If too dry, add liquids. If too moist, add flour. Only add 1/2 to 1 tablespoon at a time.

公司简介 产品特点 执行标准 构件名称 电器原理图 技术规格 注意事项 操作指南 清洁及保养 繁体及英文

HELP SECTION

Q17: Why can't the delayed finish be set for more than 13 hours?
A17: The maximum length of delay is 13 hours, including the particular cycle time. See *Using the Timer.*

Q18: Why can't I operate the machine when the DISPLAY WINDOW shows E00 or E01?
A18: If the temperature in the bread chamber is higher than 50℃, the DISPLAY WINDOW will show E01. If the temperature is lower than -10℃, the DISPLAY WINDOW will show E00. Let the machine cool down or warm up before you make bread.

Q19: How will I know when to add fruits and nuts to the bread?
A19: The Fruit & Nut beep signals when to add raisins, nuts, etc. if it is more convenient for you to add them at the start, you will still have acceptable results. However, the added ingredients may be broken apart during kneading.

Q20: My baked bread is too moist? What can I do?
A20: Humidity may affect the dough. After 5 minutes of kneading, check the dough consistency. If it appears too moist, add more flour 1/2 to 1 tablespoon at a time. For best results, remove the baked bread from the pan soon after the baking is completed.

Q21: Why do I get air bubbles at the top of the bread?
A21: This can be caused by using too much yeast.

Q22: When using raisins, the bread machine crushes them. How can I avoid this?
A22: Add raisins, nuts etc., at the Fruit and Nut Beep. For best results, use dry raisins. Also check your dough consistency 5 minutes into kneading. If the dough is too dry, it will not incorporate the raisins easily.

Q23: Why does my bread rise and then collapse or crater?
A23: The bread may be rising too fast. To reduce the rate of rising, reduce the amount of water and/or increase the amount of salt and/or decrease the amount of yeast.

Q24: Can I use my favorite bread recipes (traditional yeast bread) in my bread machine?
A24: Yes, but you will need to experiment to get the right proportion of ingredients. Become familiar with the unit and make several loaves of bread before you begin experimenting. Never exceed a total amount of 4+1/3 cups dry ingredients. Use the recipes in this book to help determine the ratio of flour to liquid and amounts of yeast, sugar, salt, and fat to use.

Q25: Why do the loaves vary in height and weight? The whole wheat and multi-grain breads are always shorter. Am I doing something wrong?
A25: No, it is normal for Whole Wheat and Multi-Grain breads to be shorter and denser than Basic or French breads. Whole Wheat and Rye flours are heavier than white bread flour; therefore they don't rise as much during the bread making process. They also typically have added ingredients, such as oats, bran, nuts, and raisins, which contribute to the shorter height and denser texture.

BAKING TIPS INSTRODUCTION

When developing ACA Baker's Select Bread Machine recipes, hundreds of loaves of bread were baked using the most popular brands of flours and yeasts available. If you use flour processed by a local mill it may have different characteristics and produce different results than popular national brands. If you followed the recipe in the cook-book exactly and feel the results should be better, use the BAKING TIPS on the following pages to help you